NISSAN PRIMASTAR EURO 5
TECHNICAL SPECIFICATIONS

PRIMASTAR GRADES

Primastar's car-like smoothness, precise steering and good visibility give excellent driver control under all conditions. Now with three grades to choose from Primastar offers the ideal van to suit your needs, whether you need a basic workhorse or comfortable cab loaded with car like features.

E GRADE

CARGO AREA ACCESSIBILITY

- Unglazed 180° opening rear doors
- Unglazed nearside (left) sliding door
- Side and rear door-activated loading lamps
- 6 x Floor mounted lashing rings

SAFETY AND SECURITY

- ABS
- Driver airbag
- 3-Point seatbelts (x2)
- Seatbelt pre-tensioners
- High mounted rear brake lamp
- 4 Disc brakes (ventilated front)
- Side-impact door bars
- 1/3 Tubular bulkhead behind driver
- Engine immobiliser and alarm
- Remote central locking
- Deadlocking
- 2-Button key

COMFORT AND CONVENIENCE

- Single CD player with steering wheel controls
- Aux input socket for MP3 players
- 3-Way adjustable driver's seat with height adjust
- Adjustable single passenger seat
- Tinted windows
- Power assisted steering
- Manual mirrors
- Manual windows
- Tachometer
- Intermittent wash-wipe (windscreen)
- Map lamp
- Dash-mounted gear lever
- Driver and passenger cup holders
- Door pocket with large bottle holder
- Glovebox with CD and sunglasses holder
- Bulkhead coats hooks in cabin

OPTIONS

- Metallic paint

SE GRADE
ADDITIONAL TO E GRADE

SAFETY AND SECURITY

- Twin passenger seat with additional 3-point seatbelt

COMFORT AND CONVENIENCE

- 3-Button key with opening/locking of selective doors
- Full steel bulkhead
- Power windows
- Power and heated door mirrors
- Nissan Rear Park System (RPS)
- Trip computer
- Bluetooth

OPTIONS

- Metallic paint
- Power take-off
- Digital tachograph
- Off-side (right) unglazed sliding loading door

OPTION PACKS

- Comfort Pack
- Safety Pack
- Glazed Tailgate Pack
- Glazed Rear Doors Pack

SE+ GRADE
ADDITIONAL TO SE GRADE

SAFETY AND SECURITY

- ESP
- Fog lamps
- Passenger airbag

COMFORT AND CONVENIENCE

- Air conditioning with pollen filter
- Automatic wipers and lights
- Full wheel trims
- Wooden floor liner
- Leather steering wheel
- Cruise control

OPTIONS

- Metallic paint

primastar

MODEL											
Length			Short Wheelbase						Long Wheelbase		
Roof height			Low				High		Low		High
Engine			M9R 115								
Payload			1000		1200		1200		1200		
Transmission			manual	semi-auto	manual	semi-auto	manual	semi-auto	manual	semi-auto	manual	semi-auto
ENGINE											
No.of cylinders			4								
Valves per cylinder			4								
Engine capacity		cm^3	1995								
Bore x Stroke		mm	84x90								
Maximum engine power		hp	115								
		rpm	3500								
Maximum torque		Nm	300								
		rpm	1500								
Compression ratio			15.19:1								
Fuel type			Diesel								
Fuel supply			Direct Common Rail								
DRIVE TRAIN											
Transmission			6 Speed manual/6 Speed semi-automatic								
Drive wheels			Front								
CHASSIS											
Suspension		Front	Independent, McPherson strut, coil springs, anti-roll bar								
		Rear	Torsion beam axle, coil springs with progressive action, shock absorbers with variable damping and anti-roll bar								
Steering			Rack and pinion, power assisted								
Braking system			Ventilated discs front : 305mm/28mm, plain discs rear : 280mm/12mm, Hydraulic braking and two independent circuits in “X”, power assisted (EBD, 4 sensor ABS)								
Wheel size			6 J 16								
Tyre size		Standard	205/65		215/65						
PERFORMANCE											
Maximum speed		km/h	160								
		mph	99.4								
Min. turning circle (kerb to kerb)		m	11.84						13.17		
FUEL CONSUMPTION & EMISSIONS											
Fuel Consumption	Urban Cycle	l/100 Km / MPG	9.1/ 31.04	7.6/ 37.17	9.1/ 31.04	7.6/ 37.17	9.2 /30.70	8.1 /34.87	9.1/ 31.04	7.6/ 37.17	9.2/ 30.70	8.1/ 34.87
	Extra Urban	l/100 Km / MPG	6.5/ 43.46	6.3/ 44.84	6.5/ 43.46	6.3/ 44.84	7.1/ 39.79	7.4 /38.17	6.5/ 43.46	6.3/ 44.84	7.1/ 39.79	7.4/ 38.17
	Conbined	l/100 Km / MPG	7.5/ 37.66	6.8/ 41.54	7.5/ 37.66	6.8/ 41.54	7.9/ 35.76	7.7 /36.69	7.5/ 37.66	6.8/ 41.54	7.9/ 35.76	7.7/ 36.69
CO_2 mas Emission (Combined)		gr/Km	198	178	198	178	207	202	198	178	207	202

MODEL												
Length			Short Wheelbase						Long Wheelbase			
Roof height			Low				High		Low		High	
Engine			M9R 115									
Payload			1000		1200		1200		1200			
Transmission			manual	semi-auto	manual	semi-auto	manual	semi-auto	manual	semi-auto	manual	semi-auto
WEIGHTS												
Kerb weight	Min.	kg	1710	1710	1710	1710	1781	1781	1748	1748	1833	1833
Gross vehicle weight		kg	2790	2790	2950	2950	2940	2940	3030	3030	3030	3030
Maximum payload*		kg	1080	1080	1240	1240	1159	1159	1282	1282	1197	1197
Max trailer weight (1)	Braked	kg	2000									
	Unbraked	kg	750									
OVERALL DIMENSIONS												
Length		mm	4782						5182			
Width		mm	1904									
Height (unladen)	Min.	mm	1955	1955	1963	1963	2465	2465	1962	1962	2464	2464
Wheelbase		mm	3098						3498			
Overhang	Front	mm	833									
	Rear	mm	851									
Track	Front	mm	1615									
	Rear	mm	1630									
Ground clearance (unladen)		mm	168	177	178		177		178		177	
CARGO AREA DIMENSIONS												
Maximum length		mm	2400						2800			
Maximum width		mm	1690									
Maximum height		mm	1387				1913		1387		1913	
Maximum width between wheel arches		mm	1268									
Maximum load platform height		mm	534				527		533		525	
Cargo volume		m^3	5.02				7.09		5.94		8.36	
Side door	Width	mm	1000									
	Height	mm	1285									
Back door	Width	mm	1390									
	Height	mm	1335				1818		1335		1818	
FUEL TANK												
Capacity		l	90									

*GVW minus unladen weight (driver and crew weight must be subtracted).

(1) When a vehicle is fitted with a towbar, it is recommended that a tachograph is fitted, since the ability to tow a trailer giving a Gross Train Weight (GVW + Trailer Weight) of over 3,500Kg without a tachograph could be considered to be contrary to EU and UK road traffic legislation.

PRIMASTAR					
Dimensions (mm)		Van			
		SWB Low	SWB High	LWB Low	LWB High
Wheelbase	A	3098		3498	
Overall length	B	4782		5182	
Overall height	C	1955* 1963**	2465	1962	2464
Sill height	D	534	527	533	525
Overall width	E	1904			
Cargo length	F	2400		2800	
Cargo height	G	1387	1913	1387	1913
Cargo width	H	1690			
Width between wheel arches	I	1268			

*1.0 tonne payload models
**1.2 tonne payload models

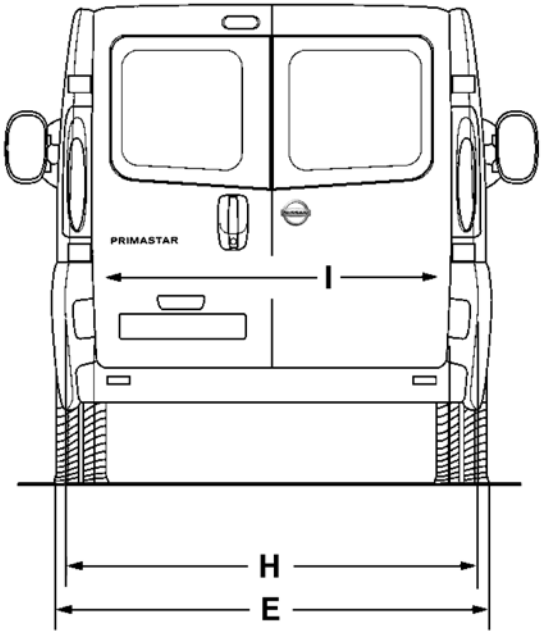

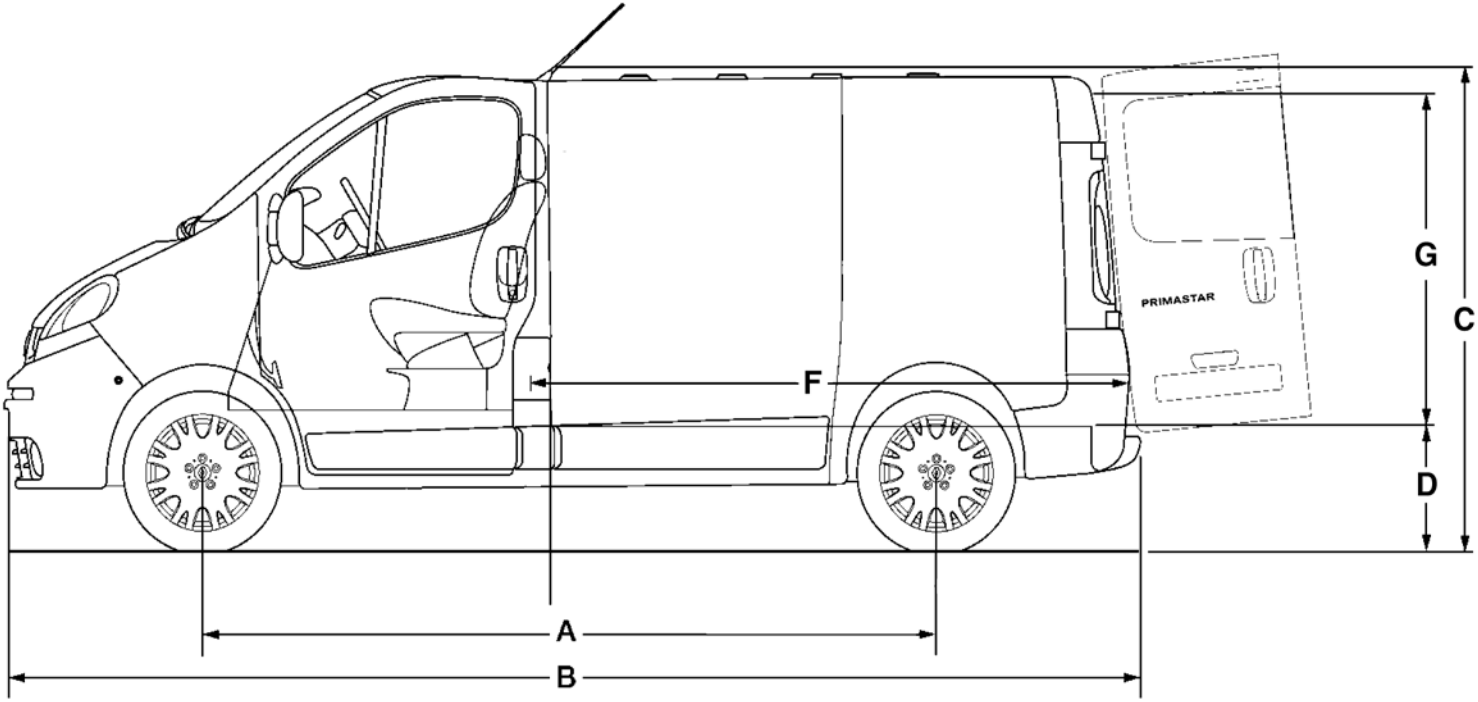

PRIMASTAR

MINIBUS GRADES

The Primastar Minibus is the stylish way to transport up to eight passengers. With the responsiveness of a car and a highly effective braking system of all round disc brakes with ABS and EBD, driver or passenger, everybody can enjoy the ride of the Primastar Minibus. With the availability of several optional extras, it's easy to make the most of the Primastar Minibus, whatever your business; whatever your needs.

SE GRADE

CARGO AREA ACCESSIBILITY

- Rear glazed tailgate
- No bulkhead
- Side and rear door-activated loading lamps
- Rear load area rubber floor covering
- Double sliding doors with opening windows
- Rear wiper
- Heated rear window

SAFETY AND SECURITY

- Driver airbag
- Passenger airbag
- Seatbelt pre-tensioners
- High mounted rear brake lamp
- ABS with EBD and EBA
- Panoramic door mirrors
- Side impact door bars
- 4 Disc brakes (ventilated front)
- Nissan Rear Park System (RPS)
- Immobiliser and alarm
- Remote central locking
- Deadlocking
- 3-Button key

COMFORT AND CONVENIENCE

- Single CD player with steering wheel controls
- Aux input socket for MP3 players
- 3-Way adjustable driver seat and height adjust
- Twin passenger seat-bench with additional 3-point seatbelt
- Removable 2nd row of seats (bench - 3 seats)
- Foldable and removable 3rd row of seats (bench - 3 seats)
- Power assisted steering
- Reach adjustable steering wheel
- One-touch power windows
- Power and heated door mirrors
- Front body coloured bumper - partly coloured
- 3rd Row area with windows
- Trip computer
- Bluetooth

OPTIONS

- Metallic paint
- Digital tachograph and towbar

OPTION PACKS

- Comfort Pack
- Safety Pack
- Combi Cargo

PRIMASTAR MINIBUS			
Dimensions (mm)		Minibus	
		SWB Low	LWB Low
Wheelbase	A	3098	3498
Overall length	B	4782	5182
Overall height	C	1952 - 1956	
Sill height	D	6 seat: 540 / 9 seat: 535	6 seat: 538 / 9 seat 532
Overall width	E	1904	
Cargo length	F	2360/1548	2760/1948
Cargo height	G	1369	
Cargo width	H	1678	
Width between wheel arches	I	1234	

minibus

			MODEL	
Length			Short Wheelbase	Long Wheelbase
Roof height			Low	
Engine			M9R 115	M9R 115
Gross vehicle weight			2900	
Seats			9 / 6 Seats	
Transmission			manual	manual
ENGINE				
No.of cylinders			4	
Valves per cylinder			4	
Engine capacity		cm3	1995	1995
Bore x Stroke		mm	84x90	84x90
Maximum engine power		hp	115	115
		rpm	3500	
Maximum torque		Nm	300	300
		rpm	1500	1500
Compression ratio			15.19:1	15.19:1
Fuel type			Diesel	
Fuel supply			Direct Common Rail	
DRIVE TRAIN				
Transmission			6 speed manual	6 speed manual
Drive wheels			Front	
CHASSIS				
Suspension		Front	Independent, McPherson strut, coil springs, anti-roll bar	
		Rear	Torsion beam axle, coil springs with progressive action, shock absorbers with variable damping and anti-roll bar	
Steering			Rack and pinion, power assisted	
Braking system			Ventilated discs front : 305mm/28mm, plain discs rear : 280mm/12mm, Hydraulic braking and two independent circuits in “X”, power assisted (EBD, 4 sensor ABS)	
Wheel size			6 J 16	
Tyre size			215/65	215/65
PERFORMANCE				
Maximum speed		km/h	160	160
		mph	99.4	99.4
Min. turning circle (kerb to kerb)		m	11.84	13.17
FUEL CONSUMPTION & EMISSIONS				
Fuel Consumption	Urban Cycle	l/100 Km / MPG	9.2/30.70	9.2/30.70
	Extra-Urban	l/100 Km / MPG	6.7/42.16	6.7/42.16
	Combined	l/100 Km / MPG	7.6/37.17	7.6/37.17
CO_2 mas Emission (Combined)		gr/Km	200	200

MODEL				
Length			Short Wheelbase	Long Wheelbase
Roof height			Low	
Engine			M9R 115	M9R 115
Gross vehicle weight			2900	
Seats			9 / 6 Seats	
Engine capacity			manual	manual
WEIGHTS*				
Kerb weight	Min.	kg	1901	1907
Gross vehicle weight			2940	3055
Maximum payload*			1039	1148
Max trailer weight (1)	Braked	kg	2000	
	Unbraked	kg	750	
OVERALL DIMENSIONS				
Length		mm	4782	5182
Width (Excluding side mirrors)		mm	1904	
Height (unladen)	Min.	mm	1954 / 1956	1952 / 1954
Wheelbase		mm	3098	3498
Overhang	Front	mm	833	
	Rear	mm	851	
Track	Front	mm	1615	
	Rear	mm	1630	
Ground clearance (unladen)		mm	180	179 / 178
CARGO AREA DIMENSIONS				
Maximum length		mm	2360 / 1548	2760 / 1948
Maximum width		mm	1678	
Maximum height		mm	1369	
Maximum width between wheel arches		mm	1234	
Maximum load platform height		mm	534 / 539	532 / 538
Cargo volume		m3	0.94 / 2.19	1.55 / 2.81
Side door	Width	mm	1000	
	Height	mm	1285	
Back door	Width	mm	1390	
	Height	mm	1306	
FUEL TANK				
Capacity		l	90	

*Weights and dimensions for 3 seats/6 seats/9 seats versions without options, driver and passengers, including coolant, oils, spare wheel, tools and 90% full fuel.
*GVW minus unladen weight (driver and crew weight must be subtracted).
(1) When a vehicle is fitted with a towbar, it is recommended that a tachograph is fitted, since the ability to tow a trailer giving a Gross Train Weight (GVW + Trailer Weight) of over 3,500Kg without a tachograph could be considered to be contrary to EU and UK road traffic legislation.

SHIFT_ is an English word from a Japanese car company that best embraces our values and the mission of this corporation. No matter where you are in the world, SHIFT_ is the way to express who we are, how we work and what we are trying to accomplish.

Everything we touch, we SHIFT_ and everything we SHIFT_ we try to make better and uniquely Nissan.

Visit our websites at:
www.nissan.co.uk
www.nissan-lcv.co.uk

Dealer stamp:

NISSAN

SHIFT_the way you move

We take all our environmental responsibilities very seriously – innovation today comes with a deep respect for the environment. Our engines are now much more unobtrusive and their emissions have been considerably reduced. All our vehicles are designed with recycling in mind and are on target to reach 95% recyclability. This brochure is for general guidance only and its contents do not in any way constitute an offer or representation from Nissan. Every effort has been made to ensure the content of this publication is correct at the time of going to press (November 2011). In accordance with the company's policy of continuously improving its products, Nissan reserves the right to change at any time the specification and the vehicles described and shown in this publication. Nissan dealers will be informed of any such modifications as quickly as possible. Please check with your local Authorised Nissan Dealer to receive the most up-to-date information. Because of the limitations of the printing processes used, the colours shown in this brochure may differ slightly from the actual colours of the paint and interior trim materials used. All rights reserved. Reproduction in whole or part of this brochure without the written permission of Nissan is forbidden.

Benefits and services are provided by RAC Motoring Services and/or RAC Insurance Limited. RAC Motoring Services (Company No. 01424399, Head Office: 8 Surrey Street, Norwich, NR1 3NG) in respect of insurance mediation activities only and RAC Insurance Limited (Company No. 2355834, Head Office: 8 Surrey Street, Norwich, NR1 3NG) are authorised and regulated by the Financial Services Authority within the jurisdiction of the Financial Ombudsman Service and the Financial Services Compensation Scheme. Calls may be monitored and/or recorded. Roadside Assistance has been arranged for you by Nissan and is provided by RAC free of charge. Details of the contractual arrangements under which RAC Services are provided to you are available by calling 0870 366 5603.

Part number 99999-53141